Dolphin
INTERCONNECT SOLUTIONS

IBP-G5X16-3

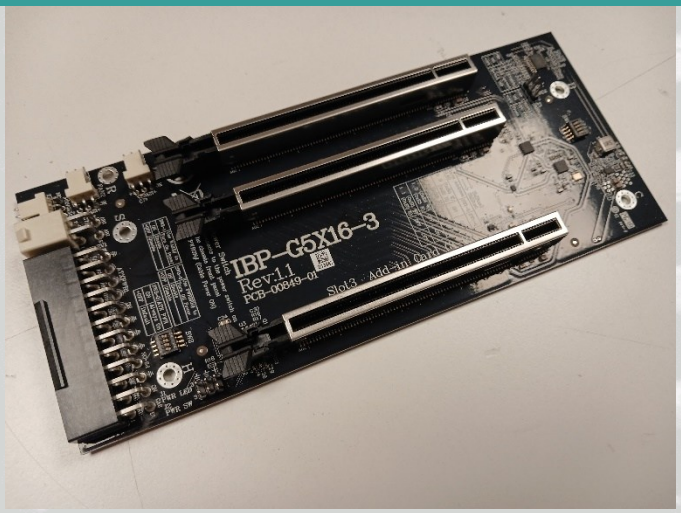

IBP-G5X16-3 v1.1 Backplane Users Guide

Version 2.0

Date: September 23rd, 2026

Table of Contents

DISCLAIMER **3**

TERMS AND ACRONYMS **3**

INTRODUCTION **4**

SPECIFICATIONS **4**

PIN HEADERS AND CONNECTORS 4
DIP-SWITCHES 5
SUPPORTED DOLPHIN TARGET CARDS 5
BLOCK DIAGRAM 6
ATX / MICROATX CABINET MOUNTING 6
OPERATING ENVIRONMENT 7

INSTALLATION **7**

STEP 1 - UNPACK BOARD 7
STEP 2 – INSTALL THE IBP-G5X16-3 IN A CABINET 7
STEP 3 – CONNECT THE POWER SUPPLY 7
STEP 4 – INSTALL THE DOLPHIN PCIE UPLINK CARD 7
STEP 5 – CONFIGURE FOR ALWAYS-ON 7
STEP 6 – CONNECT THE CABINET FANS 7

SUPPORT **7**

COMPLIANCE AND REGULATORY TESTING **8**

EMC COMPLIANCE 8
ROHS COMPLIANCE 8
WEEE NOTICE 8

LIMITED WARRANTY **9**

WARRANTY PERIOD 9
COVERAGE 9
SERVICE PROCEDURE 9

DISCLAIMER

DOLPHIN INTERCONNECT SOLUTIONS RESERVES THE RIGHT TO MAKE CHANGES WITHOUT FURTHER NOTICE TO ANY OF ITS PRODUCTS TO IMPROVE RELIABILITY, FUNCTION, OR DESIGN.

TO THE FULLEST EXTENT PERMITTED BY LAW, DOLPHIN WILL NOT BE LIABLE FOR ANY INDIRECT, INCIDENTAL, SPECIAL OR CONSEQUENTIAL DAMAGES (INCLUDING LOST PROFITS, LOST DATA, OR LOSS OF USE) ARISING OUT OF ANY USE OF DOLPHIN'S PRODUCTS, SOFTWARE OR SERVICE PROVIDED. DOLPHIN'S MAXIMUM LIABILITY WILL NOT EXCEED THE TOTAL AMOUNT PAID FOR THE PRODUCT BY THE PURCHASER.

LIFE SUPPORT POLICY

DOLPHIN INTERCONNECT SOLUTIONS' PRODUCTS ARE NOT AUTHORIZED FOR USE AS CRITICAL COMPONENTS IN LIFE SUPPORT DEVICES.

ENVIRONMENTAL POLICY

Dolphin is minimizing the amount of printed documentation and software CDs in its shipments; please download additional documentation and software from www.dolphinics.com.

Terms and acronyms

Important terms and acronyms used in this manual

Dolphin Uplink card	Dolphin Transparent adapter cards configured for Dual Passive Expansion / two x8 Target functionality. Dolphins MXH932, MXH94x and MXH95x currently support this functionality.
Add-On card	Any standard PCIe plug-in card.

Introduction

Dolphin's IBP-G5X16-3 three-slot passive backplane enables customers to establish remote access to two x8 PCIe devices. With a Dolphin PCIe adapter and copper or fiber cables, the PCIe devices can be located up to 200 meters from the controlling PC. The installed PCIe uplink adapter fully supports peer-to-peer communication between the two add-on slots.

The IBP-G5X16-3 is a bare-bones component; if you are interested in a pre-configured expansion system, please consider Dolphins eBox 4 expansion series. More information can be found at https://dolphinics.com/products/eBox_4.html.

Specifications

The IBP-G5X16-3 is a passive backplane supporting PCIe 1.0 through 5.0 speeds and x1, x2, x4, and x8 link widths. Both Add-on slots are identical and can be used for any customer PCIe card. (The silk print specifies Add-On and Target cable adapter slots)

- Two PCIe x8 slots for Add-On Cards (Slot1+Slot3)
- One PCIe x16 Target Cable Adapter slot for a compliant Dolphin PCIe uplink card (Slot2)
- Support any combination of PCIe x1/ x2 /x4 and x8 width / PCIe 1.0 through 5.0 speed
- 81.28(W) mm x 193(L) mm
- Compliant with ATX / MicroATX cabinets.

Pin headers and connectors

The card has the following connectors and pin headers:

Slot1/Slot3: PCIe x16 PCI-E 5.0 SMT Type Slots (x8 mode)

- For Customer PCIe Add-On Cards

Slot1: PCIe Lane 0~7

Slot3: PCIe Lane 8~15

Slot2: PCIe x16 PCI-E 5.0 SMT Type Slot

- For Dolphin MXH532, MXH572, MXH932, MXH94x or MXH95x Transparent target adapter only

ATXPWR1: Power Connector

- ATX 24-Pin Power Connector

ATX12V1: Power Connector

- ATX 12V 4-Pin Power Connector

FAN1-3: FAN Power Connector (12V Output)

- JST compatible wafer 3pin (pitch=2.54mm) connector

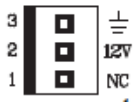

J2: Power Switch Pin Header

- 3pin Header (pitch=2.54mm)

Connect to the power switch on the cabinet front panel to enable the card to power on when the power button is pressed. Pin 1-2

POWER LED: 3.3V Power LED Pin Header J1

- 3pin Header (pitch=2.54mm)

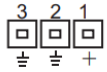

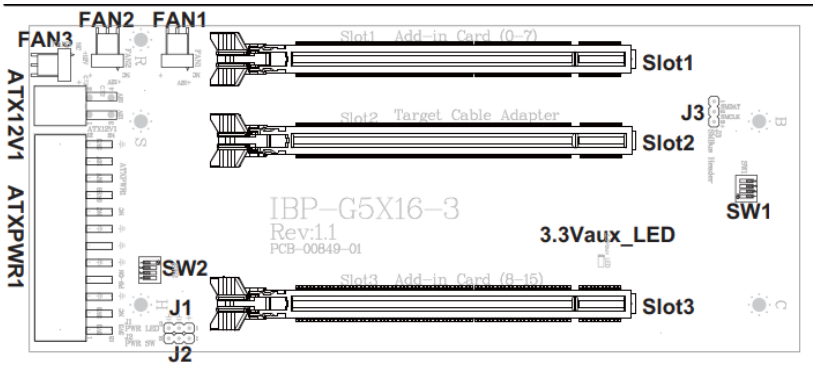

DIP-Switches

The SW1-1 and SW1-2 DIP switches control backplane PCIe clocking (REFCLK). This is the recommended setting for the supported Dolphin uplink cards. SW1-1 OFF supports legacy applications where the clock is taken from Slot2.

SW1-1 ON enables on-board REFCLK, recommended ON.

SW1-2 ON sets a –0.5% spread-spectrum for the on-board REFCLCK, recommended OFF.

SW1-3 and SW1-4 set SMBUS-Slave Addresses, recommended OFF.

SW2-1 ON enables WAKE from any PCIe slot to turn PSU on, recommended OFF.

SW2-2 ON enables BWRBRK# from any PCIe slot to turn PSU off, recommended OFF.

SW2-3 ON enables PS-ON to always power PSU on, recommended OFF.

Supported Dolphin Target cards

All Transparent MXH532, MXH572, MXH932, MXH94x and MXH95x adapter cards are supported. The IBP-G5X16-3 backplane comes with a high-quality reference clock (REFCLK) generator that is recommended for use with the supported Dolphin uplink cards. Please refer to the firmware release notes for your uplink card to confirm that this use case (incoming REFCLK) is supported, or upgrade the firmware as needed. Optionally, this clock generator can be disabled to support use cases where the uplink card is used to generate the REFCLK.

Block diagram

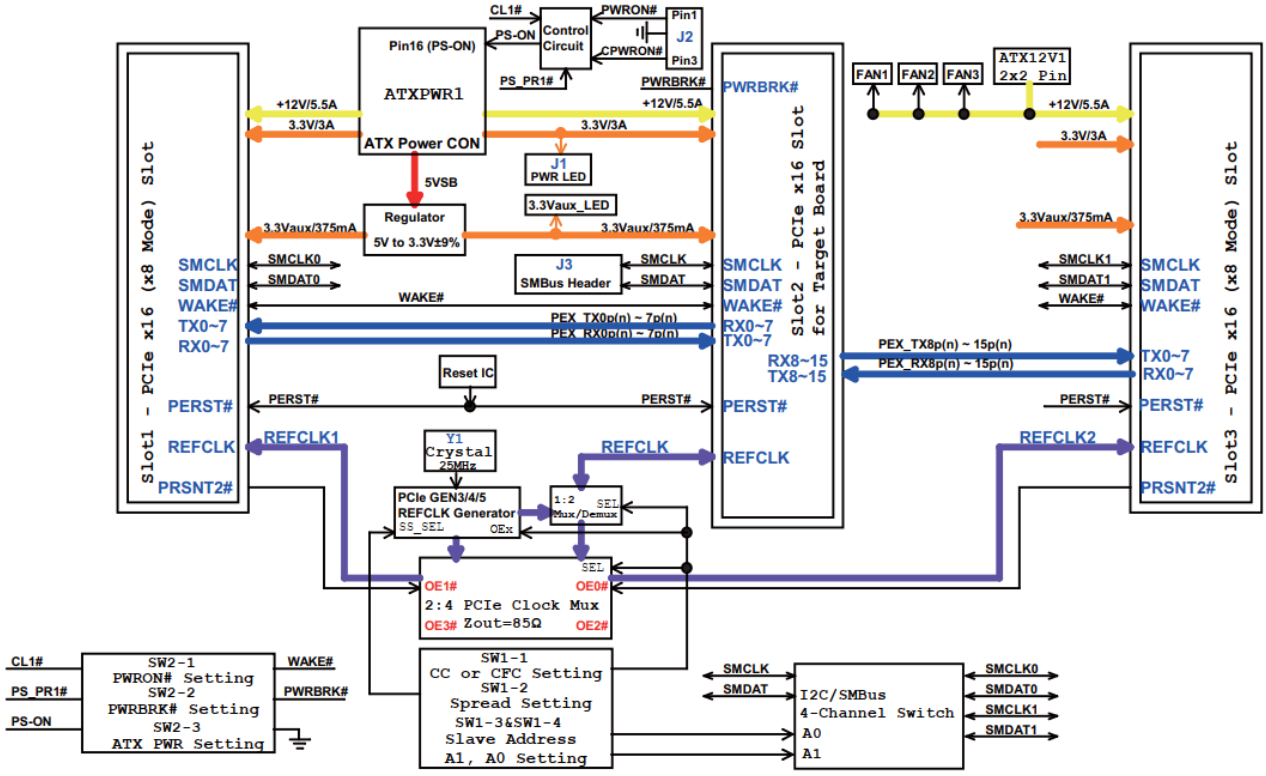

ATX / MicroATX Cabinet mounting

The IBP-G5X16-3 is compliant with both MicroATX and ATX cabinets. Please refer to the figure below for dimensions and mounting holes.

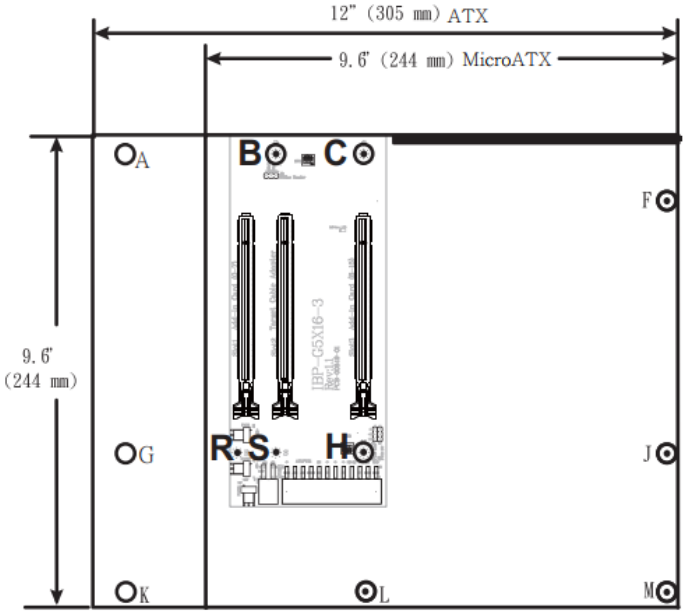

Form Factor	Mounting hole location
ATX	A, B, C, F, G, H, J, K, L, M
MicroATX	B, C, F, H, J, L, M, R, S
IBP-G5X16-3	B, C, H, R, S

Key, mounting holes
MicroATX ●
ATX ○

Operating Environment

To maximize product lifetime and maintain the warranty, please follow the specified operating temperature for the Dolphin PCIe uplink card and the installed PCIe device, and ensure proper airflow. Use special care when using IBP-G5X16-3 in office-type cabinets with other high energy-consuming PCIe devices, e.g., non-actively cooled GPUs. Please consult the PCIe uplink card user's guide and the installed PCIe devices user's guide for details.

Installation

Step 1 - Unpack board

The IBP-G5X16-3 is shipped in an anti-static bag to prevent static electricity damage. Remove the card from the bag only after taking anti-static precautions. Static electricity from your clothes or work environment can damage your PCI Express adapter card or your PC. Always wear a grounded anti-static wrist strap while opening the expansion chassis and when the IBP-G5X16-3 is removed from the anti-static bag.



Unpack the IBP-G5X16-3 from the anti-static bag using proper anti-static procedures.

Step 2 – Install the IBP-G5X16-3 in a cabinet

The backplane can be installed in an ATX- or MicroATX-compliant chassis with proper airflow to meet the requirements of both the Dolphin uplink card and the installed Add-On cards.

Step 3 – Connect the Power Supply

Power the backplane from an ATX 24-pin power supply and connect the additional 12V supply cable to the 12V connector. The power supply must provide enough power for both the Dolphin uplink card and the PCIe adapter card installed.

Step 4 – Install the Dolphin PCIe uplink card

Configure and install the Dolphin PCIe uplink card in Slot 2. Please refer to the Users Guide for the selected PCIe card. The guides can be found at https://www.dolphinics.com/MX. To operate the IBP-G5X16-3 backplane, please ensure that the target card fully supports the 2 x8 edge target configuration with an incoming PCIe reference clock.

Step 5 – Configure for always-on

Connect the cabinet power toggle switch to the pin header marked **'J2'** or set DIP-switch SW2-3 to ON. This connects to the ATX power-supply Power-good pins and signals the PSU unit to start and provide power. With a toggle switch, you can leave the ATX PSU on and control power to the device with this switch; with a jumper, you can turn the expansion system on or off with the ATX PSU power switch.

Step 6 – Connect the cabinet FANs

To ensure proper cooling for the Dolphin uplink card and the Plug-On cards, you must always install and connect the appropriate number of fans. The fans can be connected to the FANx pin headers. Using the IBP-G5X16-3 without fans is not supported and will void the warranty of your Dolphin uplink card and possibly damage your Add-On cards.

Support

More information about the product, support, and software downloads is available at http://www.dolphinics.com.
For general support questions, please contact Dolphin via the Jira Service Management portal: www.dolphinics.com/support

Compliance and Regulatory Testing

EMC Compliance

The IBP-G5X16-3 is not tested for EMC compliance. The customer is responsible for installing the backplane in a proper cabinet and installing the PCIe adapter cards of choice before conducting their own EMC test.

This does not ensure that it will comply with the relevant standards in any random cabinet. The integrator is responsible for ensuring their products comply with all regulations for where they will be used.

RoHS Compliance

The Dolphin IBP-G5X16-3 is RoHS compliant. A Compliance certificate issued by the manufacturer is available upon request.

WEEE Notice

The IBP-G5X16-3 is labeled in accordance with European Directive 2002/96/EC concerning waste electrical and electronic equipment (WEEE). The Directive sets the framework for returning and recycling used appliances throughout the European Union. This label is applied to products to indicate that the product is not to be thrown away but returned to your local approved WEEE waste collector.



Limited Warranty

Dolphin Interconnect Solutions warrants this product to be free from manufacturing defects under the following terms:

Warranty Period

The warranty applies for one (1) year from the date of purchase. An extended warranty is available.

Coverage

To the extent permitted by applicable law, this warranty does not apply to:

- Damage caused by operator error or non-compliance with instructions available for the product.
- Use or attempt to use or program firmware not approved by Dolphin.
- Damage due to accidents, abuse, misuse, improper handling or installation, moisture, corrosive environments, high voltage surges, shipping, or abnormal working conditions.
- Damage caused by acts of nature, e.g., floods, storms, fire, or earthquakes.
- Damage caused by any power source out of range or not provided with the product.
- Normal wear and tear.
- Attempts to repair, modify, open, or upgrade the product by personnel or agents not authorized by Dolphin.
- Products for which the serial number label has been tampered with or removed.
- Damage to the product caused by products not supplied by Dolphin.

Service Procedure

If the product proves defective during the Warranty Period, you should contact the seller that supplied you with the product, or if you purchased it directly from Dolphin, visit https://www.dolphinics.com/support to obtain a valid RMA number and instructions. Products returned to Dolphin without a proper RMA number will not be serviced under this warranty.