Dolphin
INTERCONNECT SOLUTIONS

IBP-G5X16-2

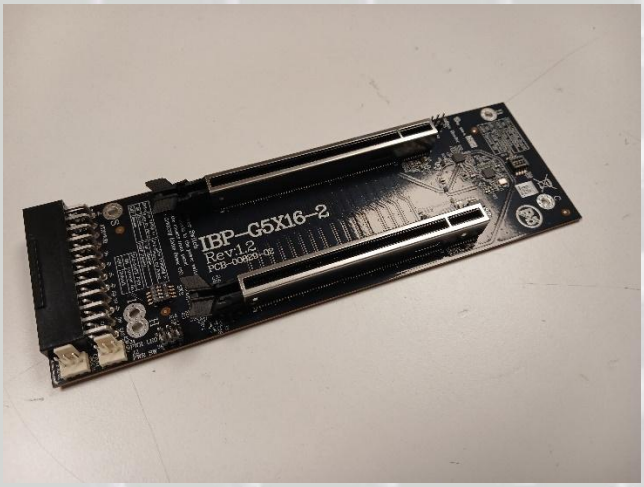

IBP-G5X16-2 v1.2 Backplane Users Guide

Version 1.0

Date: July 24th, 2026

Table of Contents

DISCLAIMER **4**

TERMS AND ACRONYMS **4**

INTRODUCTION **5**

SPECIFICATIONS **5**

PIN HEADERS AND CONNECTORS 5
DIP-SWITCHES 6
SUPPORTED DOLPHIN ADAPTER CARDS 6
BLOCK DIAGRAM 7
ATX / MICROATX CABINET MOUNTING 7
OPERATING ENVIRONMENT 8

INSTALLATION **9**

STEP 1 - UNPACK BOARD 9
STEP 2 – INSTALL THE IBP-G5X16-2 IN A CABINET 9
STEP 3 – CONNECT THE POWER SUPPLY 9
STEP 4 – INSTALL THE DOLPHIN PCIE UPLINK CARD 9
STEP 5 – CONFIGURE FOR ALWAYS ON 9
STEP 6 – CONNECT THE CABINET FANS 9

SUPPORT **9**

COMPLIANCE AND REGULATORY TESTING **10**

EMC COMPLIANCE 10
ROHS COMPLIANCE 10
WEEE NOTICE 10

LIMITED WARRANTY **10**

WARRANTY PERIOD 10
COVERAGE 10
SERVICE PROCEDURE 10

DISCLAIMER

DOLPHIN INTERCONNECT SOLUTIONS RESERVES THE RIGHT TO MAKE CHANGES WITHOUT FURTHER NOTICE TO ANY OF ITS PRODUCTS TO IMPROVE RELIABILITY, FUNCTION, OR DESIGN.

TO THE FULLEST EXTENT PERMITTED BY LAW, DOLPHIN WILL NOT BE LIABLE FOR ANY INDIRECT, INCIDENTAL, SPECIAL OR CONSEQUENTIAL DAMAGES (INCLUDING LOST PROFITS, LOST DATA, OR LOSS OF USE) ARISING OUT OF ANY USE OF DOLPHIN'S PRODUCTS, SOFTWARE OR SERVICE PROVIDED. DOLPHIN'S MAXIMUM LIABILITY WILL NOT EXCEED THE TOTAL AMOUNT PAID FOR THE PRODUCT BY THE PURCHASER.

LIFE SUPPORT POLICY

DOLPHIN INTERCONNECT SOLUTIONS' PRODUCTS ARE NOT AUTHORIZED FOR USE AS CRITICAL COMPONENTS IN LIFE SUPPORT DEVICES.

ENVIRONMENTAL POLICY

Dolphin is minimizing the amount of printed documentation and software CDs in its shipments; please download additional documentation and software from www.dolphinics.com.

Terms and acronyms

Important terms and acronyms used in this manual

Dolphin Uplink card	Any Dolphin Transparent host adapter cards configured for Transparent Target functionality.
Add-in card	Any standard PCIe plug in card.

Introduction

Dolphin's IBP-G5X16-2 two slot passive backplane enables customers to establish remote access to a single PCIe x16 device. Combined with a Dolphin PCIe adapter and copper cables or fiber optics, the PCIe devices can be up to 200 meters away from the controlling PC.

The IBP-G5X16-2 is a bare bone component, if you are interested in a pre-configured expansion system, please consider Dolphins eBox 4 expansion series. More information can be found at https://dolphinics.com/products/eBox_4.html

Specifications

The IBP-G5X16-2 is a passive backplane supporting PCIe 1.0 through 5.0 speeds and x1, x2, x4, x8 and x16 link-widths. Both slots are symmetric and can be used for the Dolphin PCIe uplink card or the Add-in Card. (The silk print specifies an Add-in and Target cable adapter slot – but this can be ignored when using a supported Dolphin uplink card). This manual covers version 1.2 of the IBP-G5X16-2 product.

- Two PCIe x16 slots for a Dolphin PCIe uplink card and a customer Add-in Card (Slot 1 & Slot 2)
- Support any combination of PCIe x1 / x2 / x4 / x8/ x16 and PCIe 1.0 through PCIe 5.0
- Dimensions 62.36(W) mm x 193(L) mm
- Compliant to ATX / MicroATX cabinets.
- Max Power pr slot
  12 Volt: 5.5A
  3.3 Volt: 3.0A
  3.3 Vaux: 375mA

Pin headers and connectors

The card has the following pin headers:

Slot 1: PCIe x16 PCIe 5.0 Metal-Reinforced SMT Type Slot

- For PCIe Add-in Card or target cable adapter

Slot 2: PCIe x16 PCIe 5.0 Metal-Reinforced SMT Type Slot

- For PCIe Add-in Card or target cable adapter

ATXPWR1: Power Connector

- ATX 24-Pin Power Connector

FAN1, FAN2: FAN Power Connector (12V Output)

- JST compatible wafer 3pin (pitch=2.54mm)



J2: Power Switch Pin Header

- 3pin Header (pitch=2.54mm)

Connect to the power switch on the cabinet front panel to enable the card to power on when the power button is pressed. Pin 1-2

POWER LED: 3.3V Power LED Pin Header J1

- 3pin Header (pitch=2.54mm)

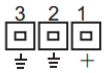

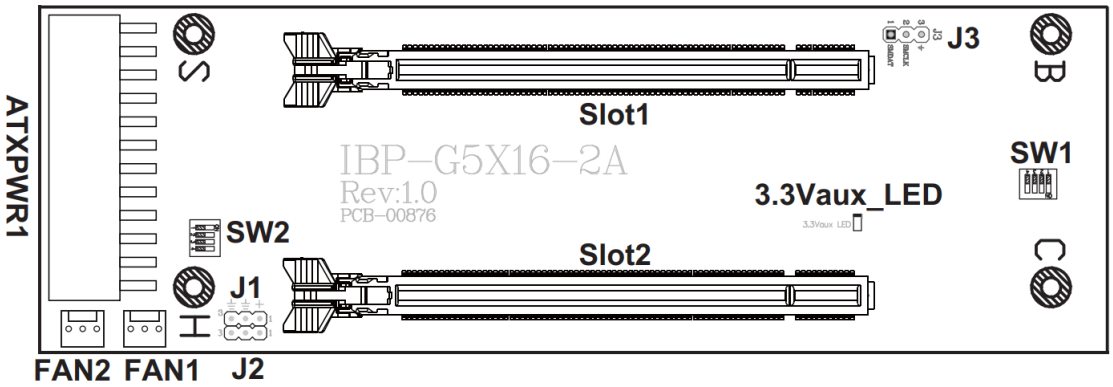

DIP-Switches

The SW1-1 and SW1-2 DIP-switches control backplane PCIe clocking (REFCLK). This is the recommended setting for the supported Dolphin uplink cards. SW1-1 OFF supports legacy applications where the clock is taken from Slot2.
SW1-1 ON enables on-board REFCLCK, recommended ON.
SW1-2 ON sets a –0.5% spread-spectrum for the on-board REFCLCK, recommended OFF.
SW1-3 and SW1-4 set SMBUS-Slave Addresses, recommended OFF.
SW2-1 ON enables WAKE from any PCIe slot to turn PSU on, recommended OFF.
SW2-2 ON enables BWRBRK# from any PCIe slot to turn PSU off, recommended OFF.
SW2-3 ON enables PS-ON to always power PSU on, recommended OFF.

Supported Dolphin adapter cards

All Transparent MXH532, MXH572, MXH932, MXH94x and MXH95x adapter cards are supported. The IBP-G5X16-2 backplane comes with a high-quality reference clock (REFCLCK) clock-generator, that is recommended for use with these supported Dolphin uplink cards. Please refer to the release notes for your uplink card to confirm that this use-case (incoming REFCLK) is supported or upgrade the firmware as needed. Optionally this clock-generator can be disabled to support use-cases where the uplink-card generates the REFCLCK.
The Transparent PXH832 adapter card is supported with the on-board clock-generator disabled. This target adapter cards is generating the REFCLCK for the add-in card.

Block diagram

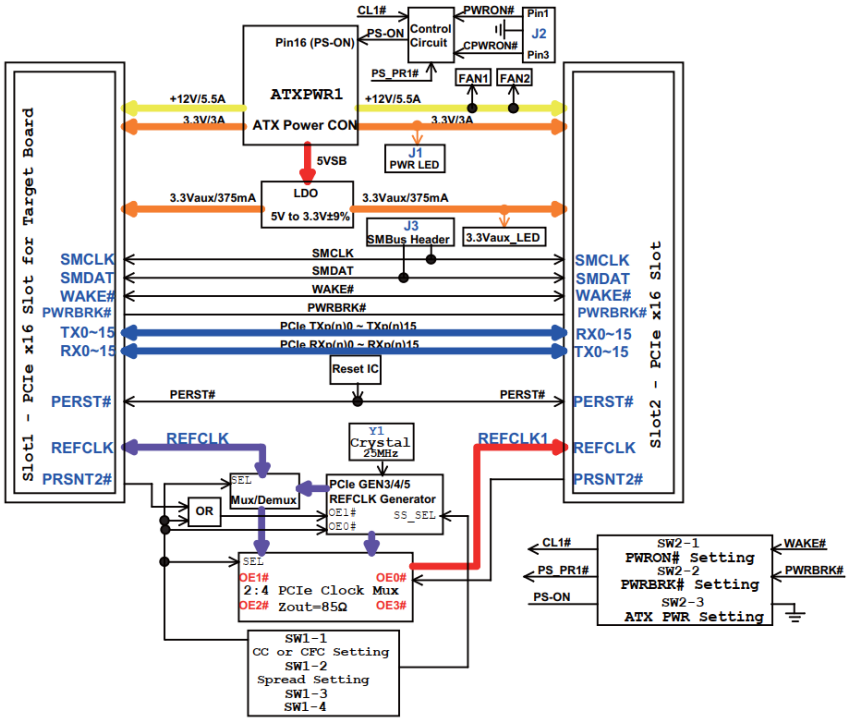

ATX / microATX Cabinet mounting

The IBP-G5X16-2 is compliant to both microATX and ATX cabinets. Please refer to the figure below for dimensions and mounting holes.

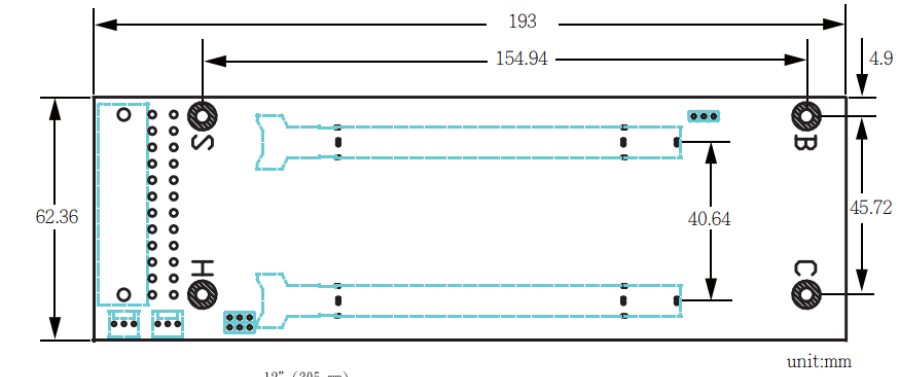

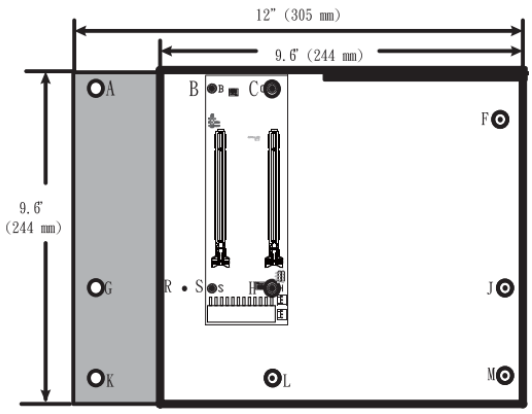

Form Factor	Mounting hole location
ATX	A, C, F, G, H, J, K, L, M
microATX	B, C, F, H, J, L, M, R, S
PCIEX16D02-2	B, C, S, H

Key, mounting holes
microATX ●
ATX ○

Operating Environment

To maximize lifetime for the products and maintain the warranty, please honor the specified operating temperature for the PCIe uplink card and the installed PCIe device and make sure the proper air flow is present. Special care should be considered when IBP-G5X16-2 is used in office type cabinets in combination with other high energy consuming PCIe devices, e.g. not active cooled GPUs. Please consult the PCIe uplink card users guide and the installed PCIe devices users guide for details.

Installation

Step 1 - Unpack board

The IBP-G5X16-2 is shipped in an anti-static bag to prevent static electricity damage. The card should only be removed from the bag after ensuring that anti-static precautions are taken. Static electricity from your clothes or work environment can damage your PCI Express adapter card or your PC. Always wear a grounded anti-static wrist strap while opening the expansion chassis and when the IBP-G5X16-2 is removed from the anti-static bag.



Unpack the IBP-G5X16-2 from the anti-static bag using proper anti-static procedures.

Step 2 – Install the IBP-G5X16-2 in a cabinet

The backplane can be installed in an ATX or MicroATX compliant Chassis with proper airflow to meet the requirements of both the Dolphin uplink card and the installed Add-On cards.

Step 3 – Connect the Power Supply

The backplane must be powered from an ATX 24-Pin Power Supply. The power supply must provide enough power for both the Dolphin uplink card and the PCIe adapter card installed.

Step 4 – Install the Dolphin PCIe uplink card

Configure and Install the Dolphin PCIe uplink card in Slot 1. Please refer to the Users Guide for the selected PCIe card. The guides can be found at https://www.dolphinics.com/MX. To operate the IBP-G5X16-3 backplane, please ensure that the target card fully supports the x16 edge target configuration with incoming PCIe reference clock.

Step 5 – Configure for always on

Connect the cabinet power toggle switch to the pin header marked **'J2'** or set DIP-switch SW2-3 to ON. This connects to the ATX power-supply Power-good pins and signals the PSU unit to start and provide power. With a toggle switch, the ATX PSU can be left switched on, and power to the device can be controlled with this switch, while with a jumper, the expansion system can be turned on or off with the ATX PSU power switch.

Step 6 – Connect the cabinet FANs

To ensure proper cooling for the Dolphin uplink card and the Plug-On cards, you must always install and connect the appropriate number of fans. The fans can be connected to the FANx pin headers. Using the IBP-G5X16-2 without fans is not supported and will void the warranty of your Dolphin uplink card and possibly damage your Add-On cards.

Support

More information about the product, support and software download can be found at http://www.dolphinics.com.
For general support questions, please contact Dolphin via the Jira Service Management portal:
https://www.dolphinics.com/csp.

Compliance and Regulatory Testing

EMC Compliance

The IBP-G5X16-2 is not tested for EMC compliance. It is the customer responsibility to install the backplane in a proper cabinet and install the PCIe adapter cards of choice before conducting their own EMC test.

This does not ensure that it will comply with the relevant standards in any random cabinet. It is the responsibility of the integrator to ensure that their products are compliant with all regulations where their product will be used.

RoHS Compliance

The Dolphin IBP-G5X16-2 is RoHS compliant. A Compliance certificate issued by the manufacturer is available upon request.

WEEE Notice



The IBP-G5X16-2 is labelled in accordance with European Directive 2002/96/EC concerning waste electrical and electronic equipment (WEEE). The Directive determines the framework for the return and recycling of used appliances as applicable throughout the European Union. This label is applied to products to indicate that the product is not to be thrown away but returned to your local approved WEEE waste collector.

Limited Warranty

Dolphin Interconnect Solutions warrants this product to be free from manufacturing defects under the following terms:

Warranty Period

The warranty applies for one (1) year from the date of purchase. Extended warranty is available.

Coverage

To the extent permitted by applicable law, this warranty does not apply to:

- Damage caused by operator error or non-compliance with instructions available for the product.
- Use or attempt to use or program firmware not approved by Dolphin.
- Damage due to accidents, abuse, misuse, improper handling or installation, moisture, corrosive environments, high voltage surges, shipping, or abnormal working conditions.
- Damage caused by acts of nature, e.g. floods, storms, fire, or earthquakes.
- Damage caused by any power source out of range or not provided with the product.
- Normal wear and tear.
- Attempts to repair, modify, open, or upgrade the product by personnel or agents not authorized by Dolphin.
- Products for which the serial number label has been tampered with or removed.
- Damage to the product caused by products not supplied by Dolphin.

Service Procedure

In the event that the product proves defective during the Warranty Period, you should contact the seller that supplied you with the product, or if you purchased it directly from Dolphin, visit https://www.dolphinics.com/csp to obtain a valid RMA number and instructions. Products returned to Dolphin without a proper RMA number will not be serviced under this warranty.